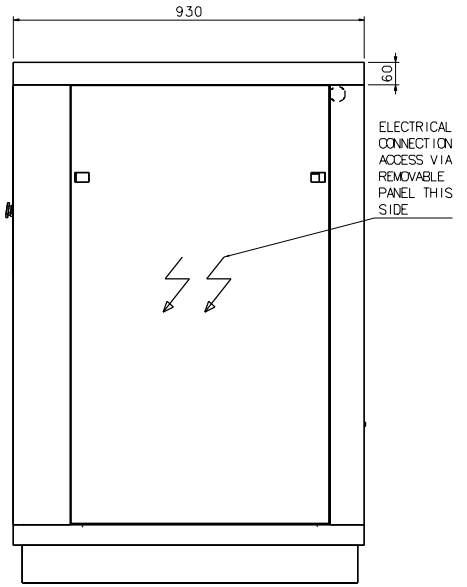

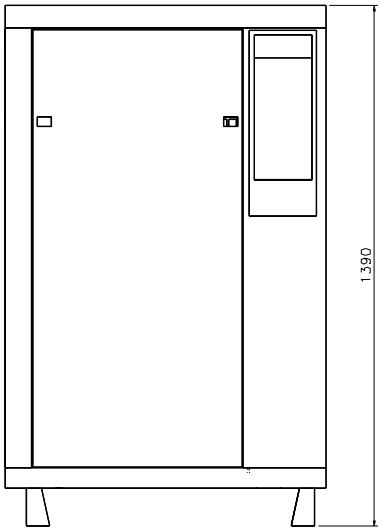

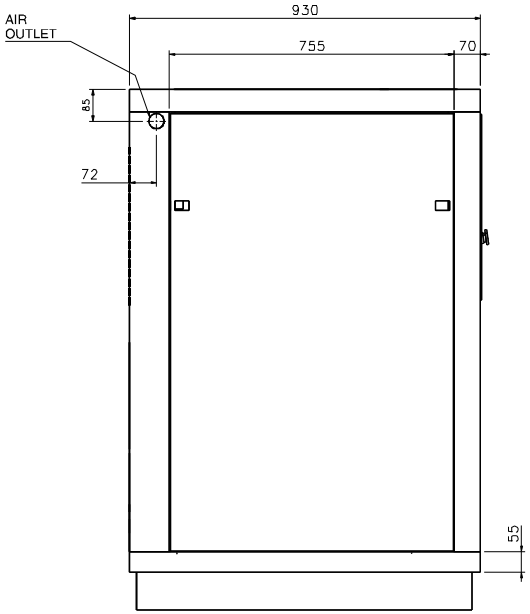

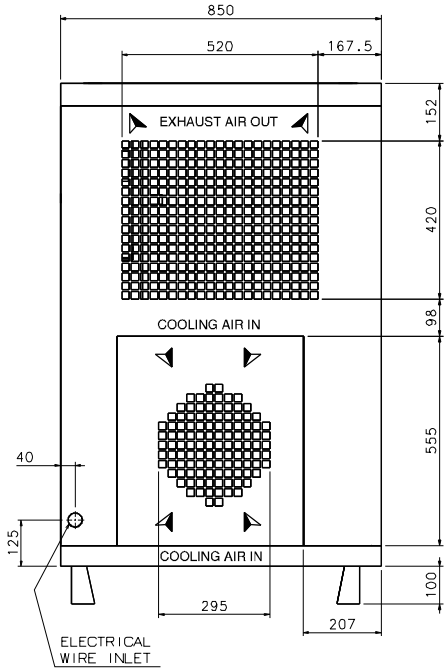

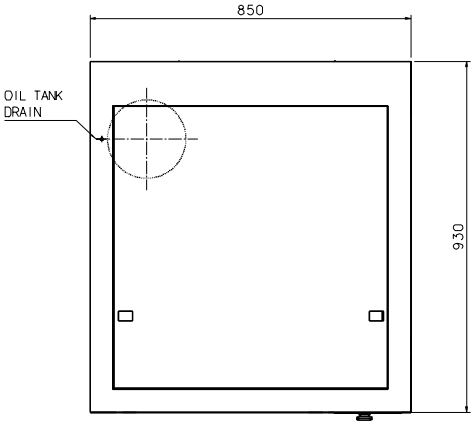

NOTES:

CONNNECTIONS		
A	COMPRESED AIR OUTLET	1" MALE
B	ELECTRICAL ENTRY	36.5 mm
C	OIL TANK DRAIN	1/2"FEMALE WITH PLUG
D	AIR COOLING FLOW RATE	3.6 m3/min
E	CONDANSATE DRAIN POINT	——
F	WEIGHT	420 KG

NOTE:
IT IS RECOMENDED THAT A MINIMUM OF 60 cm CLEARANCE ON ALL SIDES AND ABOVE THE COMPRESSOR FOR MAINTANENCE PURPOSES

REV	DESCRIPTIONS	DRAW	CHK'D	APPR.	DATE
A	ADD TABULATION, TANK DRAIN, ELEC.NOTE	V.S.	İ.K.	R.Ö.	02 MAR 07

THIS DRAWING IS THE PROPERTY OF ANKARA HAVAK IND. AND IS TRANSMITTED IN CONFIDENCE. NEITHER RECEIPT NOR POSSESION CONFERS OR TRANSFERS ANY RIGHTS TO REPRODUCE, USE OR DISCLOSE, IN WHOLE OR PART, DATA CONTAINED HEREIN FOR ANY PURPOSE, WITHOUT THE WRITTEN PERMISSION OF ANKARA HAVAK IND.

UNLESS OTHERWISE SPECIFIED DIMENSIONES ARE IN INCHES
TOLERANCES ON
FRACTIONS ± ——— DECIMALS .X ± .XX ± .XXX ±
ANGELS ±

VORTEX COMPRESSOR

CONTRACT NUMBER
DATE OF DRAWING 11 JAN 2007
DRAFTSMAN V.SAKAL
CHECKER İ.KARAHAN
ENGINEER B.OZKAN
FUNCTIONAL DESIGN
MANUFACTURING
WELDING
APPROVED R.ÖKÇÜN

ERS 18,5 COMPRESSOR
DIMENSIONS

CODE IDENT NO.
SIZE A1
DRAWING NO. 00-0185-9000
SCALE 1:5
UNIT WT ——— LB
SHEET OF

NEXT ASSY | USED ON
APPLICATION