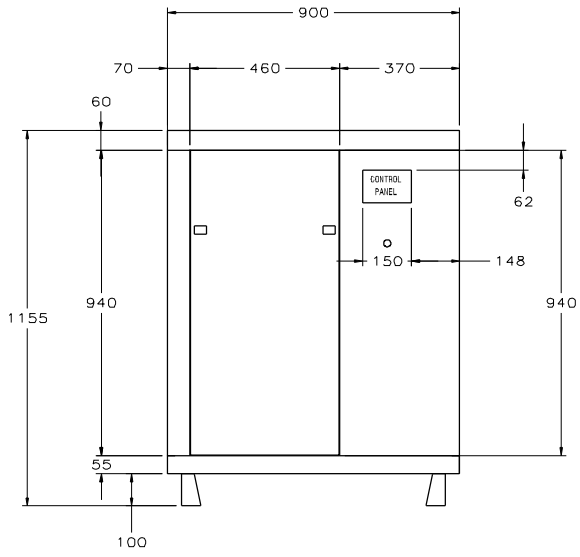

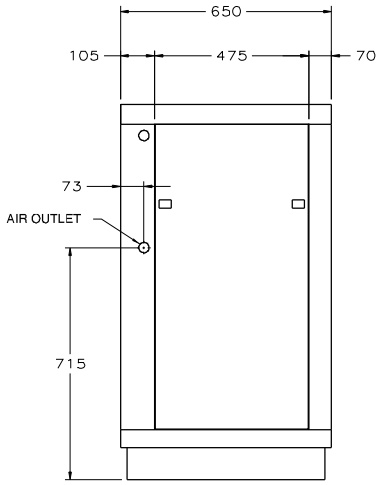

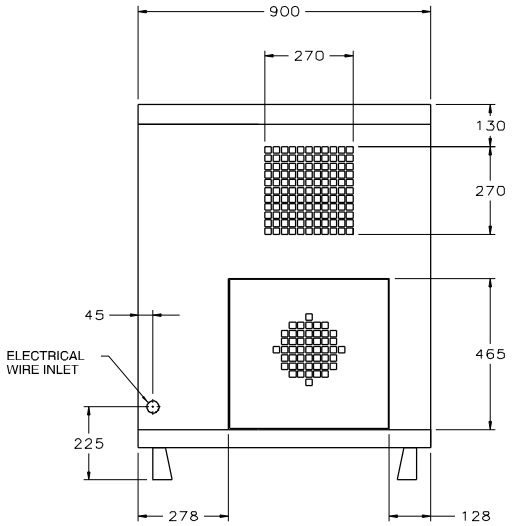

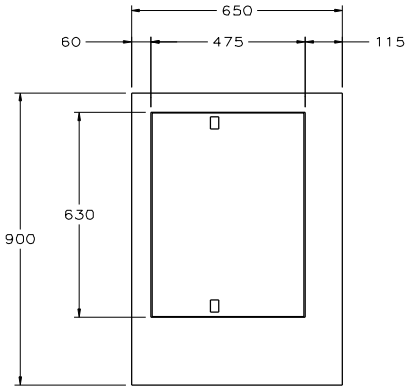

NOTES:

CONNNECTIONS		
A	COMPRESED AIR OUTLET	3/4" MALE
B	ELECTRICAL ENTRY	36.5 mm
C	OIL TANK DRAIN	1/2" FEMALE WITH PLUG
D	AIR COOLING FLOW RATE	1.4 m3/min
E	CONDANSATE DRAIN POINT	——
F	WEIGHT	240 KG

ITEM NO	QTY REQD	CODE IDENT	PART OR IDENTIFYING NO	NOMENCLATURE OR DESCRIPTION	MATERIAL	SPECIFICATION	ZONE

LIST OF MATERIALS OR PARTS LIST

THIS DRAWING IS THE PROPERTY OF ANKARA HAMAK IND. AND IS TRANSMITTED IN CONFIDENCE. NEITHER RECEIPT NOR POSSESION CONFERS OR TRANSFERS ANY RIGHTSTO REPRODUCE,USE OR DISCLOSE,IN WHOLE OR PART,DATA CONTAINED HEREIN FOR ANY PURPOSE,WITHOUT THE WRITTEN PERMISSION OF ANKARA HAMAK IND.

UNLESS OTHERWISE SPECIFIED DIMENSIONES ARE IN INCHES TOLERANCES ON

FRACTIONS ± —— ANGELS ±

DECIMALS .X ± .XX ± .XXX ±

NEXT ASSY | USED ON

APPLICATION

VORTEX COMPRESSOR

CONTRACT NUMBER

DATE OF DRAWING 01 FEB 2007

DRAFTSMAN V.SAKAL

CHECKER I.KARAHAN

ENGINEER B.OZKAN

FUNCTIONAL DESIGN

MANUFACTURING

WELDING

APPROVED R.ÖKÇÜN

VSD 7,5 COMPRESSOR

DIMENSIONS

CODE IDENT NO.

SIZE A1

DRAWING NO. I0-0075-9000

SCALE 1:5

UNIT WT —— LB

SHEET OF